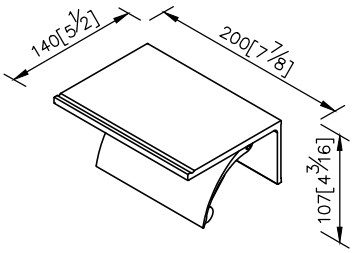

unit: mm[inch]

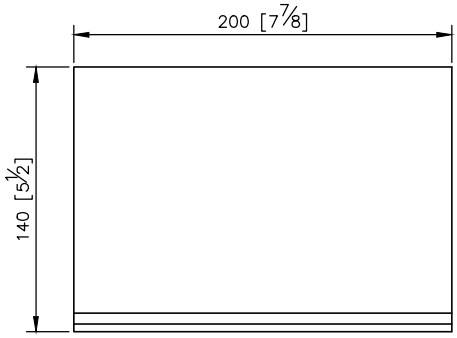

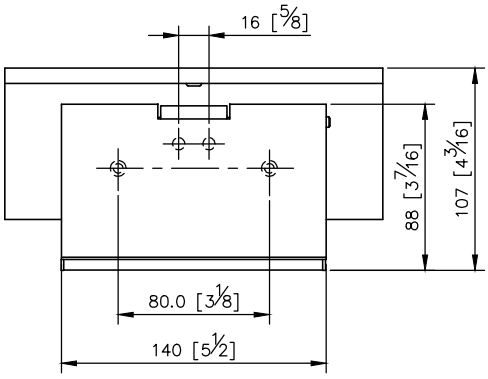

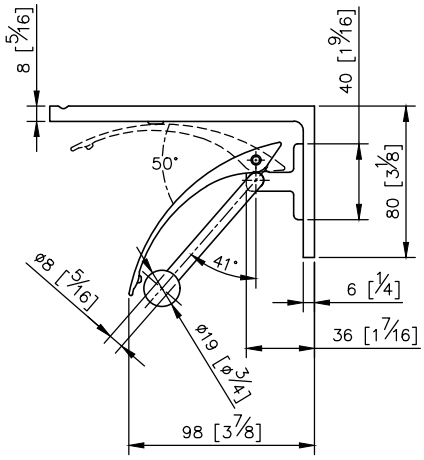
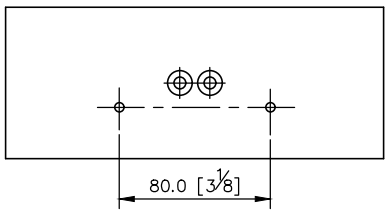
Mounting Template Specification