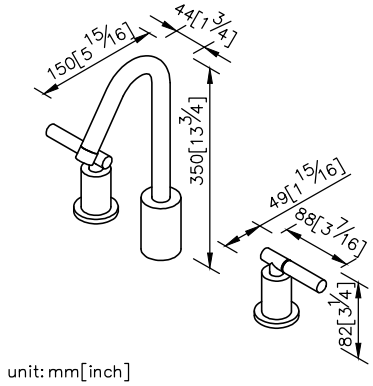
150[5 15/16]
44[1 3/4]
350[13 3/4]
49[1 15/16]
88[3 7/16]
82[3 1/4]
unit: mm[inch]

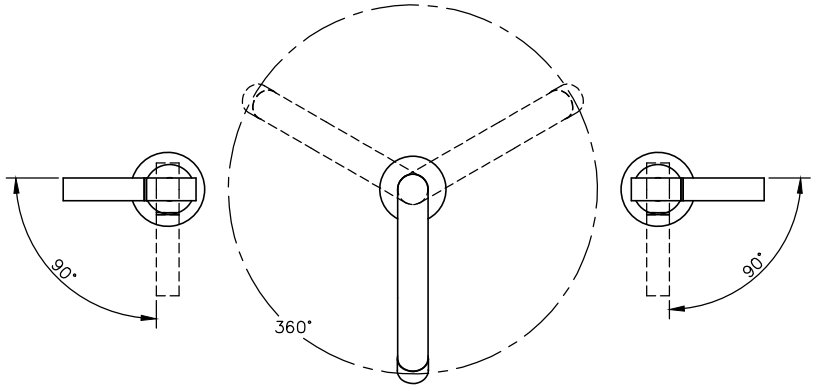
90°
360°
90°

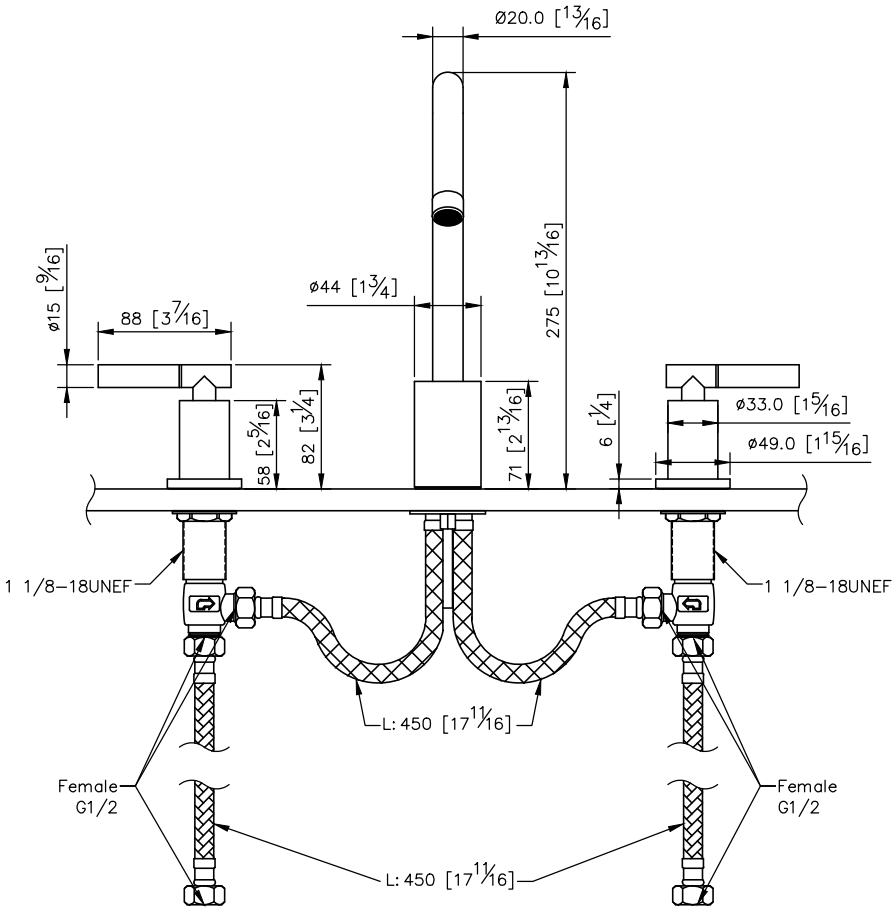
Ø20.0 [13/16]
ø15 [9/16]
88 [3 7/16]
ø44 [1 3/4]
275 [10 13/16]
58 [2 5/16]
82 [3 1/4]
71 [2 13/16]
6 [1/4]
ø33.0 [1 5/16]
ø49.0 [1 15/16]
1 1/8–18UNEF
1 1/8–18UNEF
L: 450 [17 11/16]
Female
G1/2
Female
G1/2
L: 450 [17 11/16]

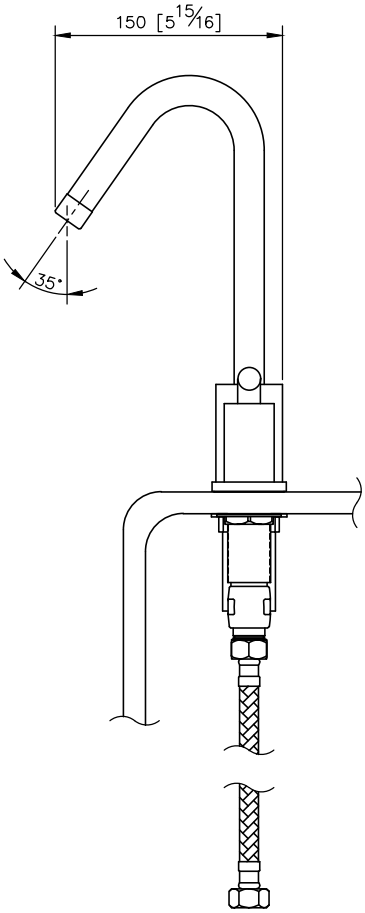
150 [5 15/16]
35°