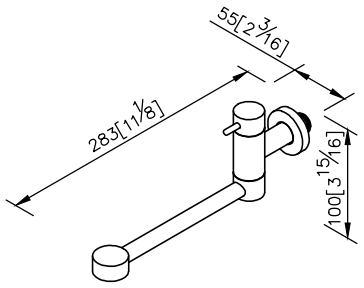
55[2 3/16]
283[11 1/8]
100[3 15/16]

unit: mm[inch]

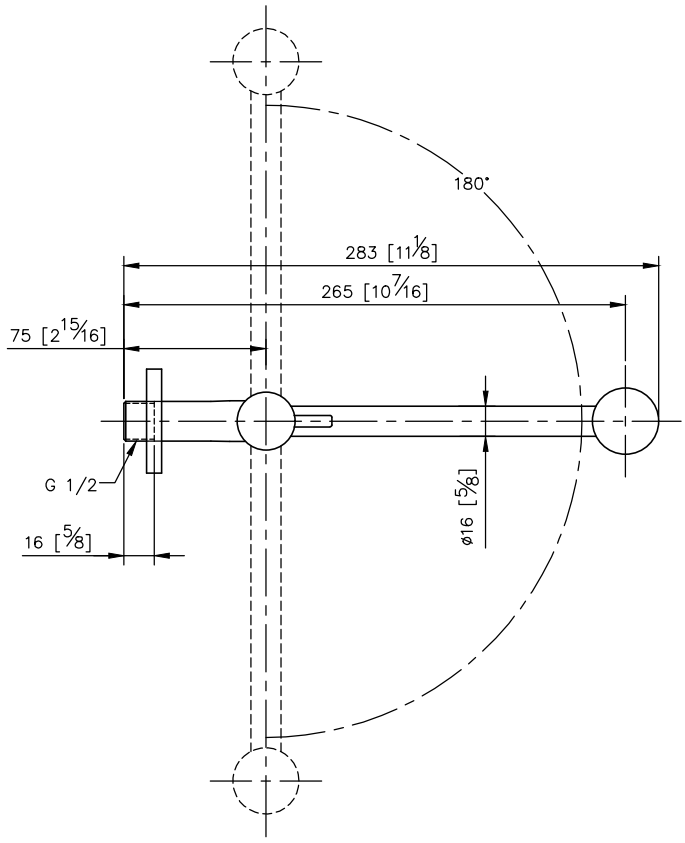
180°
283 [11 1/8]
265 [10 7/16]
75 [2 15/16]
G 1/2
16 [5/8]
ø16 [5/8]

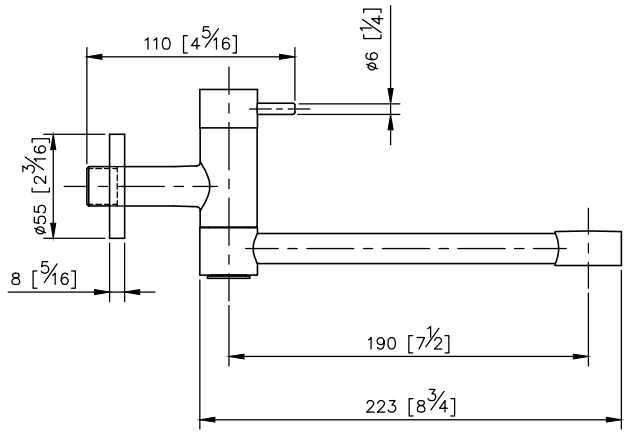
110 [4 5/16]
ø6 [1/4]
ø55 [2 3/16]
8 [5/16]
190 [7 1/2]
223 [8 3/4]

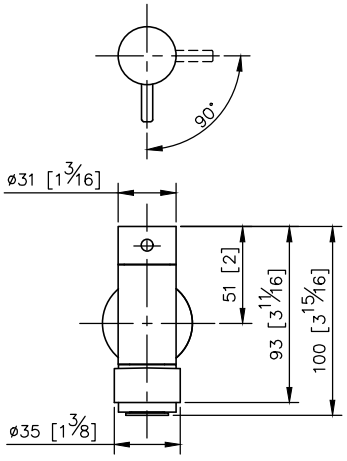
90°
ø31 [1 3/16]
51 [2]
93 [3 11/16]
100 [3 15/16]
ø35 [1 3/8]